Repair - Parts

Displacement Pump

309577J
EN

FOR USE WITH REACTOR® AIR AND ELECTRIC PROPORTIONERS

3500 psi (24.5 MPa, 245 bar) Maximum Working Pressure

Component A (ISO) Pumps with wet-cup flush feature

Part No. 246830, Series A
0.396 in.^{2} (2.55 cm^2)

Part No. 246831, Series B
0.552 in.^{2} (3.56 cm^2)

Part No. 246832, Series A
0.743 in.^{2} (4.79 cm^2)

Part No. 262647, Series A
0.552 in.^{2} (3.56 cm^2)

Component B (Resin) Pumps

Part No. 245970, Series A
0.396 in.^{2} (2.55 cm^2)

Part No. 245971, Series B
0.552 in.^{2} (3.56 cm^2)

Part No. 245972, Series A
0.743 in.^{2} (4.79 cm^2)

Part No. 262648, Series A
0.552 in.^{2} (3.56 cm^2)

TI3733

TI2663

Important Safety Instructions
Read all warnings and instructions in this manual.
Save these instructions.

HO03

PROVEN QUALITY. LEADING TECHNOLOGY.

Contents

Manual Conventions 2
Related Manuals 2
Pressure Relief Procedure 5
Tools Needed 6
Repair Kits 6
Clean and Inspect Parts 6
Supply Wet-cups with Throat Seal Liquid 7
Cutaway Views 8
Disassembly 10
Reassembly 15
Parts 22
Accessories 26
Technical Data 27
Graco Standard Warranty 28
Graco Information 28

Manual Conventions

Warning

⚠ WARNING

A warning alerts you to possible serious injury or death if you do not follow instructions.

Symbols, such as fluid injection (shown), alert you to a specific hazard and direct you to read the indicated hazard warnings on pages 3-4.

Caution

⚠ CAUTION

A caution alerts you to possible equipment damage or destruction if you do not follow instructions.

Note

A note indicates additional helpful information.

Related Manuals

The following manuals are available for the Reactor. Refer to these manuals for detailed equipment information.

Reactor Electric Proportioner	
Part No.	**Description**
309551 or 312065	Reactor Electric Proportioner, Operation Manual (English)
309574 or 312066	Reactor Electric Proportioner, Repair-Parts Manual (English)
309911	Reactor Pump Wet-Cup Flush Kits

⚠ WARNING

SKIN INJECTION HAZARD

High-pressure fluid from gun, hose leaks, or ruptured components will pierce skin. This may look like just a cut, but it is a serious injury that can result in amputation. **Get immediate surgical treatment.**

- Do not point the gun at anyone or at any part of the body.
- Do not put your hand or fingers over the gun fluid nozzle.
- Do not stop or deflect leaks with your hand, body, glove, or rag.
- Do not “blow back” fluid; this is not an air spray system.
- Follow **Pressure Relief Procedure**, page 5, when you stop spraying and before cleaning, checking, or servicing equipment.
- Use lowest possible pressure when flushing, priming, or troubleshooting.
- Engage spray gun piston safety lock when not spraying.
- Tighten all fluid connections before operating the equipment.
- Check hoses, tubes, and couplings daily. Replace worn or damaged parts immediately. High pressure hose cannot be recoupled; replace the entire hose.

FIRE AND EXPLOSION HAZARD

Solvent and fumes in work area can ignite or explode. To help prevent fire and explosion:

- Use equipment only in well ventilated area.
- Eliminate all ignition sources, such as pilot lights, cigarettes and plastic drop cloths (potential static arc).
- Do not plug or unplug power cords or turn lights on or off when flammable fumes are present.
- Keep the work area free of debris, including solvent, rags, and gasoline.
- Ground equipment and conductive objects. See **Grounding** in your Reactor manual.
- Hold gun firmly to side of grounded pail when triggering into pail.
- Use only grounded hoses.
- If there is static sparking or you feel a shock, **stop operation immediately.** Do not use equipment until you identify and correct the problem.

EQUIPMENT MISUSE HAZARD

Misuse can cause serious injury or death.

- For professional use only.
- Use equipment only for its intended purpose. Call your Graco distributor for information.
- Read manuals, warnings, tags, and labels before operating equipment. Follow instructions.
- Check equipment daily. Repair or replace worn or damaged parts immediately.
- Do not alter or modify equipment. Use only Graco parts and accessories.
- Do not exceed the maximum working pressure or temperature rating of the lowest rated system component. See **Technical Data** in all equipment manuals.
- Use fluids and solvents that are compatible with equipment wetted parts. See **Technical Data** in all equipment manuals. Read fluid and solvent manufacturer’s warnings.
- Route hoses and cables away from traffic areas, sharp edges, moving parts, and hot surfaces.
- Do not use hoses to pull equipment.
- Comply with all applicable safety regulations.

⚠ WARNING	
	BURN HAZARD This equipment is used with heated fluid, which can cause equipment surfaces to become very hot. To avoid severe burns: • Do not touch hot fluid or equipment. • Allow equipment to cool completely before touching it. • Wear gloves if fluid temperature exceeds 110°F (43°C).
	TOXIC FLUID OR FUMES HAZARD Toxic fluids or fumes can cause serious injury or death if splashed in the eyes or on skin, inhaled, or swallowed. • Read Material Safety Data Sheet (MSDS) to know the specific hazards of the fluids you are using. • Store hazardous fluid in approved containers, and dispose of it according to applicable guidelines.
	PERSONAL PROTECTIVE EQUIPMENT You must wear proper protective equipment when operating, servicing, or when in the operating area of the equipment to help protect you from serious injury, including eye injury; inhalation of toxic fumes; and hearing loss. This equipment includes but is not limited to: • Protective eyewear • Gloves, clothing, and respirator as recommended by the fluid and solvent manufacturer • Hearing protection.

Pressure Relief Procedure

WARNING

Read warnings, page 3.

1. Relieve pressure in gun and perform gun shut-down procedure. See gun manual.

2. Close gun fluid manifold valves A and B.

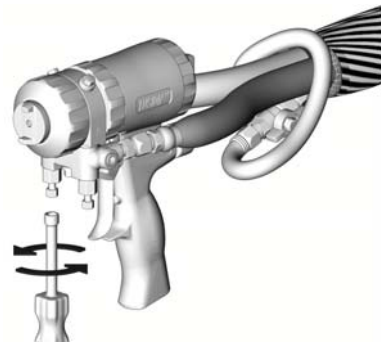

3. Shut off feed pumps and agitator, if used.

4. Turn PRESSURE RELIEF/SPRAY valves (SA, SB) to PRESSURE RELIEF. Route fluid to waste containers or supply tanks. Ensure that gauges drop to 0.

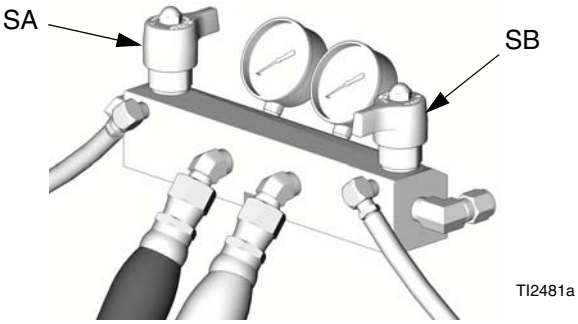

Tools Needed

- Vise with flat jaws
- 12 in. adjustable, open end wrench (2)
- Non-sparking hammer, 20 oz maximum
- Small screwdriver
- Throat Seal Liquid (TSL), Graco Part No. 206995
- ISO Pump Oil, Graco Part No. 217374
- Pick or long small screwdriver
- Snap-ring pliers
- 1/2 in. (13 mm) diameter plastic rod
- 7/8 in. deep-well socket (246830 and 245970 only)
- 1/2 in. (13 mm) x 2.5 in. (64 mm) bolt with washers and nut
- Channel locks
- Dropcloth and rags

Repair Kits

A repair kit is available for your pump. Kit parts are marked with an asterisk, for example (3*). See page 23. Kit must be purchased separately. For best results, use all parts in the kit.

Clean and Inspect Parts

1. Clean and inspect all parts. Intake and piston ball seats, sleeve, and displacement rod must not be worn, scratched, or damaged.

2. Remove and clean sleeve when repacking pump.

Supply Wet-cups with Throat Seal Liquid

WARNING

Pump rod and connecting rod move during operation. Moving parts can cause serious injury such as pinching or amputation. Keep hands and fingers away from wet-cup during operation. Turn main power OFF before filling wet cup.

1. **Component A (ISO) Pump:** Keep reservoir (R) 3/4 filled with Graco Throat Seal Liquid (TSL), Part No. 206995. Wet-cup piston (28) circulates TSL through packing nut/wet-cup (19), to carry away isocyanate film on displacement rod.

   After some time TSL will thicken and darken, and must be replaced. Thick, dirty TSL will not pump through lines and will harden in wet-cup. Check condition of TSL every week, minimum, and change when needed.

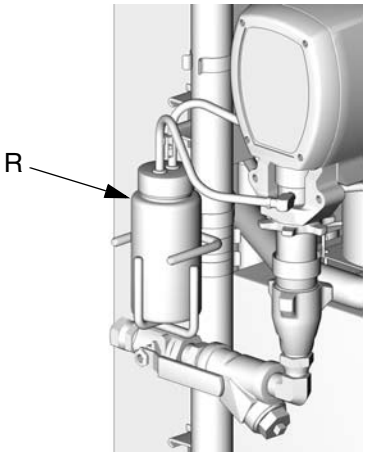

TI3765a-2

2. **Component B (Resin) Pump:** Check felt washers (21) in packing nut/wet-cup (19) daily. Keep saturated with Graco Throat Seal Liquid (TSL), Part No. 206995, to prevent material from hardening on displacement rod. Replace felt washers when worn or contaminated with hardened material.

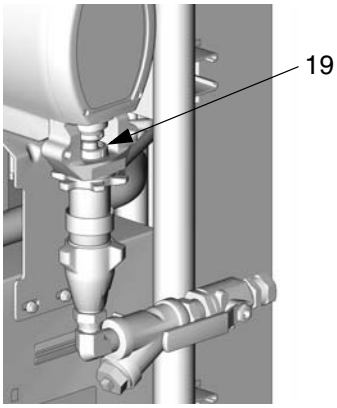

TI3765a-1

Cutaway Views

Component A (ISO) Pump

246830
246832

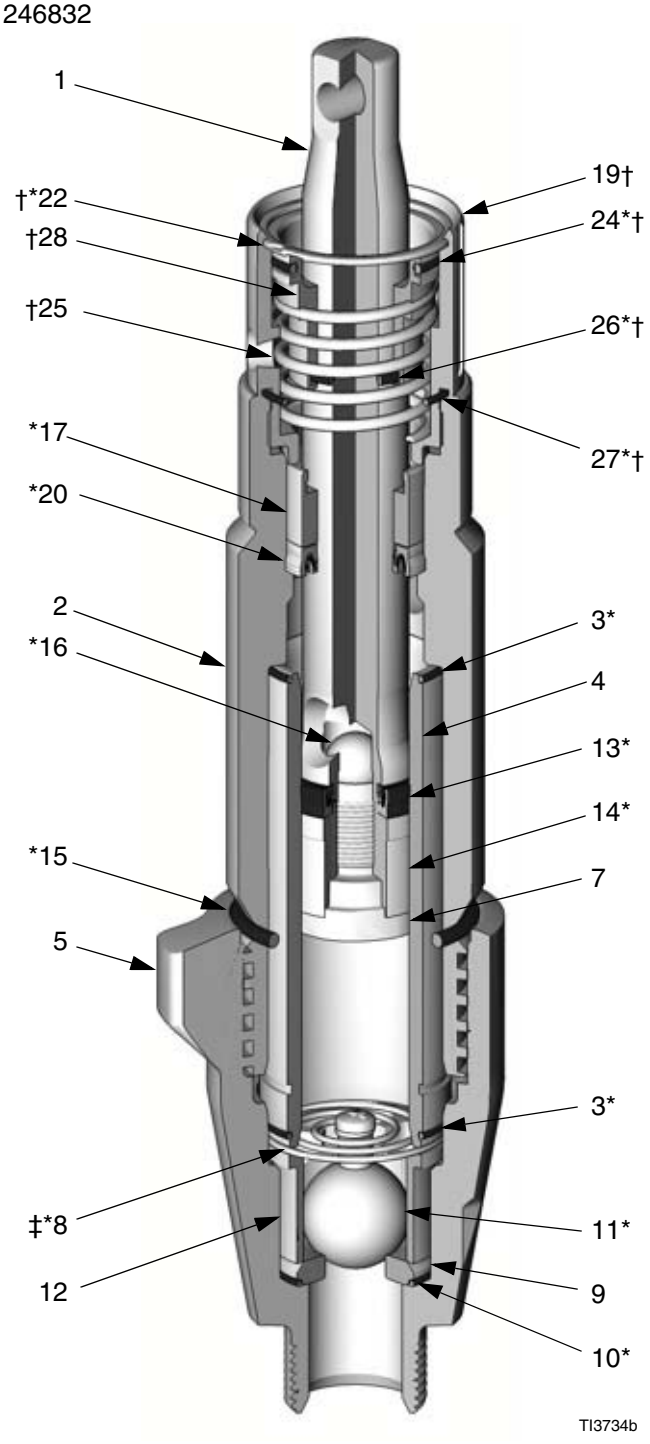

246831
262647

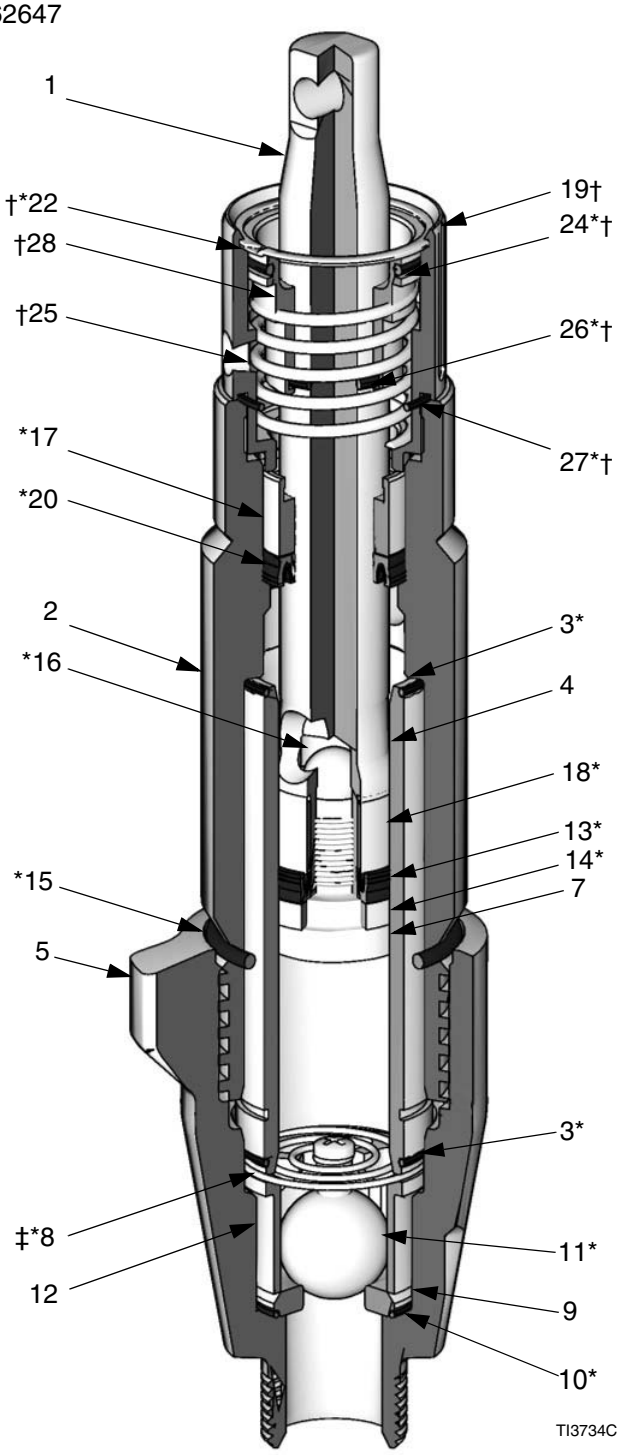

Component B (Resin) Pump

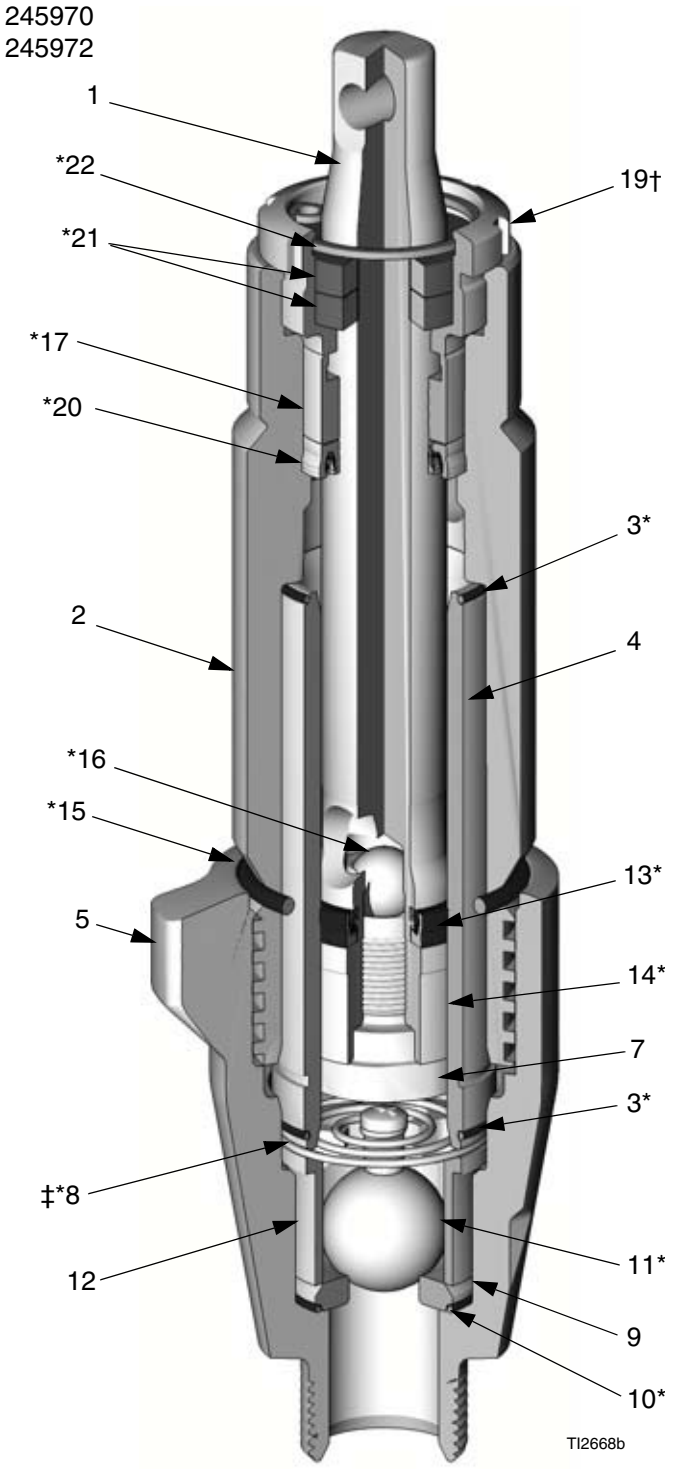

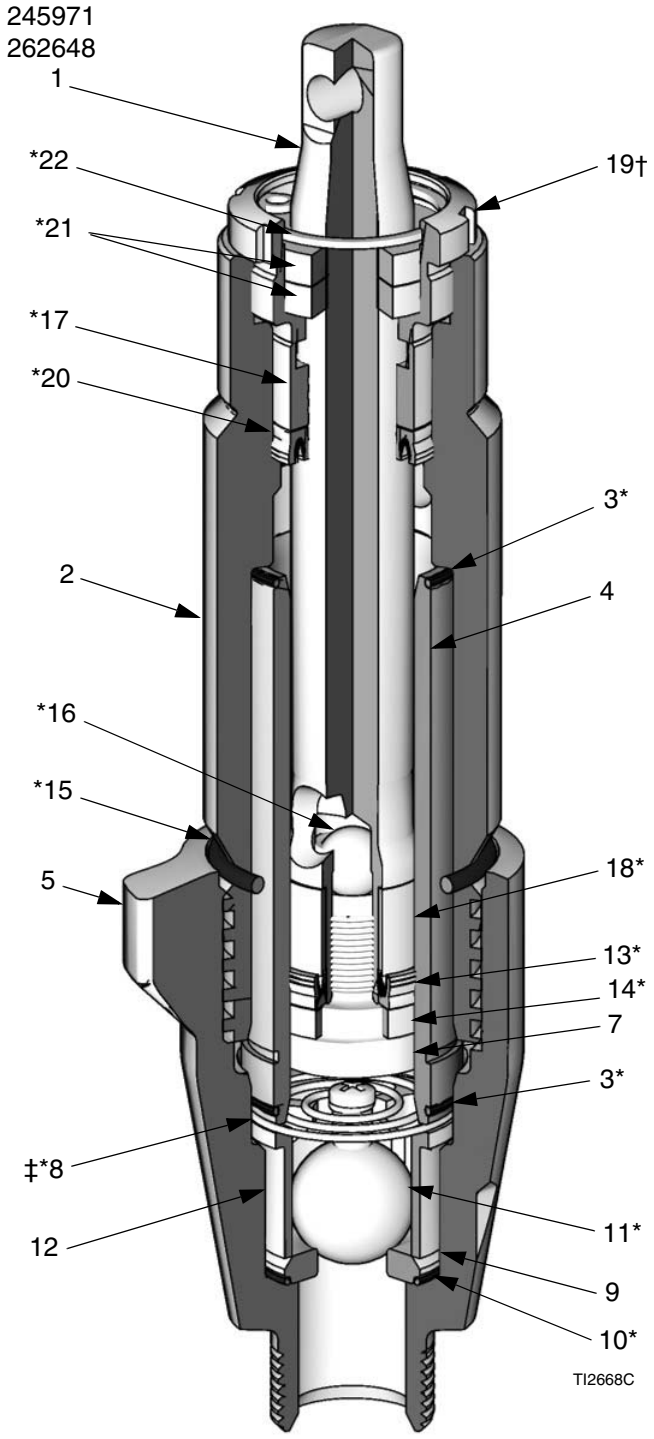

Disassembly

WARNING

Pump rod and connecting rod move during operation. Moving parts can cause serious injury such as pinching or amputation. Keep hands and fingers away from connecting rod during operation.

1. Shut off A, B, and heat zones.

2. Flush pumps. See Reactor manual.

3. Relieve pressure, page 5.

4. Press A. Motor will run until pumps are at bottom of strokes, then shut off.

5. Turn main power OFF. Disconnect power supply.

Steps 6-8 apply to pump A. See FIG. 1. To disconnect pump B, go to steps 9 and 10. Use dropcloth or rags to protect Reactor and surrounding area from spills.

6. Disconnect fluid inlet (C) and outlet (D). Also disconnect steel outlet tube from heater inlet.

7. Disconnect tubes (T). Remove tube fittings (U) from wet-cup.

8. Loosen star-shaped locknut (G) by hitting firmly with a non-sparking hammer. Unscrew pump far enough to expose retaining pin under plastic finger guard. Push retaining spring up. Push pin out. Continue unscrewing pump.

Steps 9 and 10 apply to pump B. See FIG. 2. Use dropcloth or rags to protect Reactor and surrounding area from spills.

9. Disconnect fluid inlet (C) and outlet (D). Also disconnect steel outlet tube from heater inlet.

10. Push retaining spring (E) up. Push pin (F) out. Loosen star-shaped locknut (G) by hitting firmly with a non-sparking hammer. Unscrew pump.

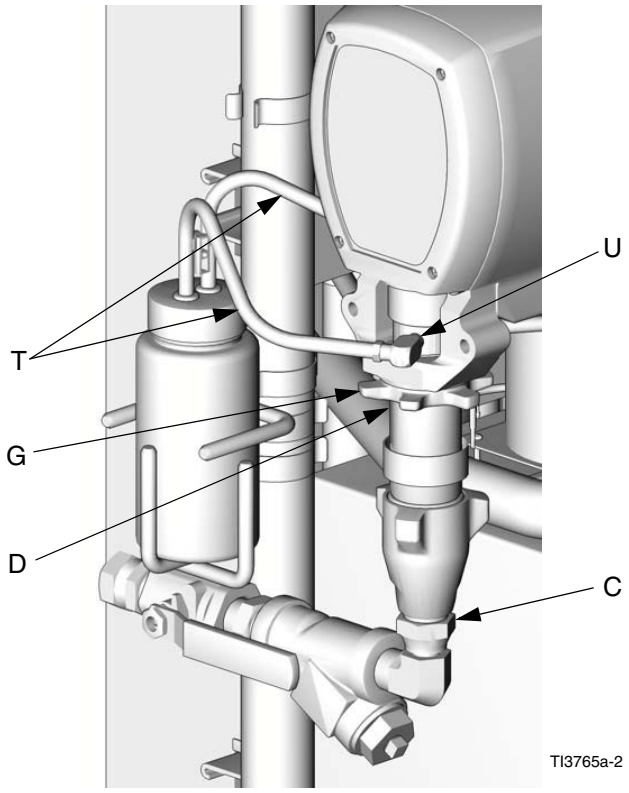

FIG. 1. Disconnect Pump A

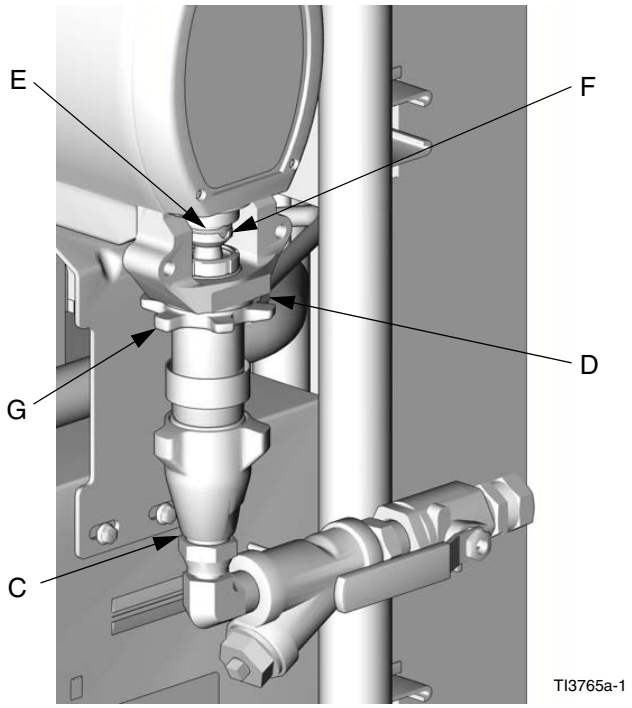

FIG. 2. Disconnect Pump B

11. Remove packing nut/wet-cup as follows:

a. **Component A (ISO) Pumps:**

- Remove packing nut/wet-cup assembly.
- Compress piston (28) into wet-cup (19), using a 1/2 in. (13 mm) x 2.5 in. (64 mm) bolt with washers and nut.
- Remove retaining ring (22).
- Remove bolt, washers, and nut.
- Remove piston (28), spring (25), and o-rings (24, 26, 27).

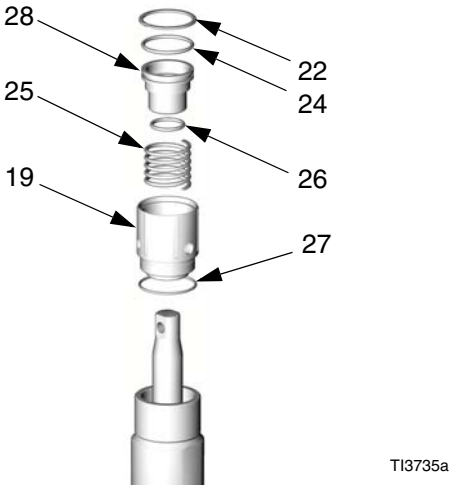

b. **Component B (Resin) Pumps:**

Unscrew packing nut (19). Remove retaining ring (22) and felt washers (21).

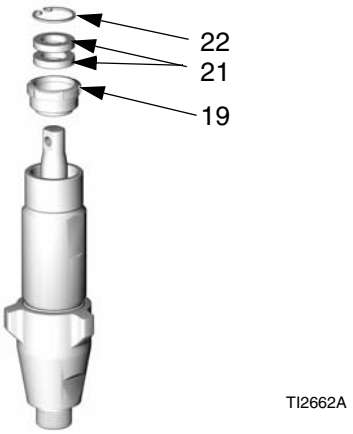

12. Loosen intake valve housing (5) with non-sparking hammer, then unscrew. Remove o-ring (15).

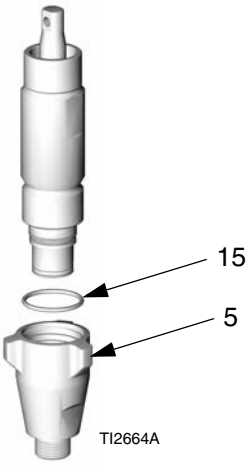

13. Disassemble intake valve. Be sure to remove o-ring (10).

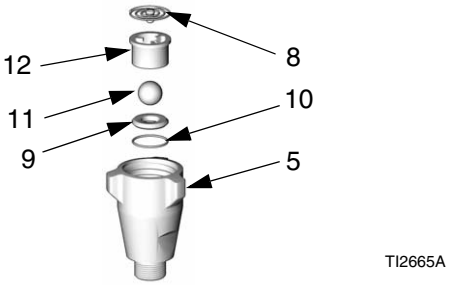

Spring (8) is on Models 246832 and 245972 only.

14. Tap rod (1) with non-sparking hammer to drive it out of cylinder (2).

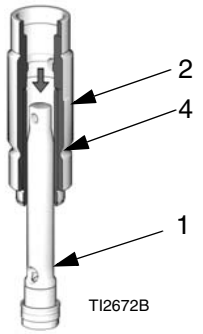

Typical configuration

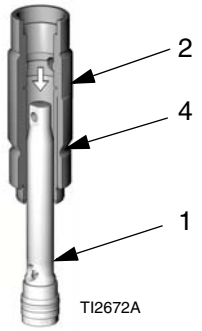

246831, 262647, 245971, and 262648 only

Sleeve (4) may come out with rod.

15. Using screwdriver in groove (H), remove sleeve (4) from cylinder (2), or pull it off rod. Remove o-rings (3).

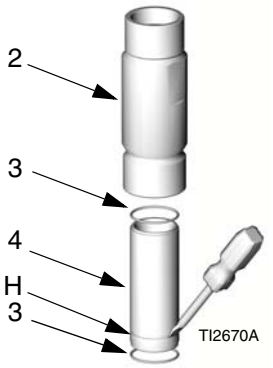

Be sure top o-ring (3) comes out.

16. Remove bushing (17).

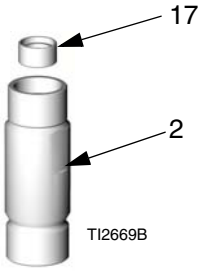

17. Unscrew piston (7) from rod (1). Remove ball (16), u-cup (13), and bushing (14).

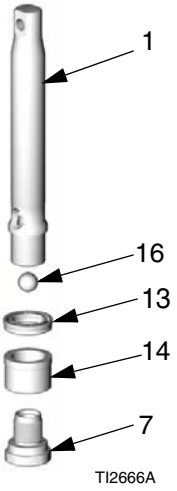

Typical configuration

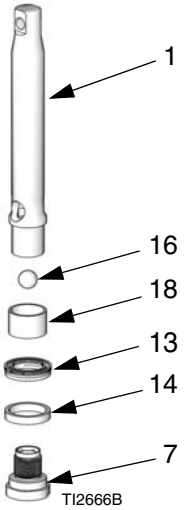

246831, 262647, 245971, and 262648 only

18. Insert piston end of rod (1) into cylinder (2) and push u-cup (20) out.

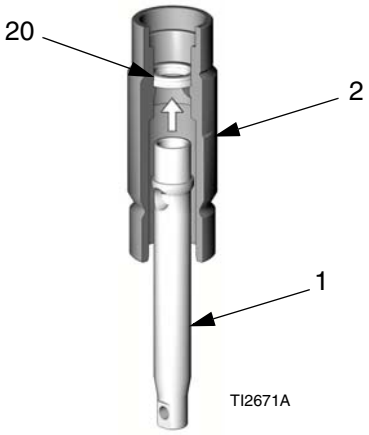

Reassembly

Coat all non-Loctited parts with Graco 217374 ISO Pump Oil before reassembly, to ease future disassembly.

1. Install ball (16*) in rod (1). Center u-cup (13*) on rod (1). Lips of u-cup must face up. Use piston (7) to evenly push u-cup onto rod, then remove piston. Slide bushing (14*) onto rod (1). Wide end of bushing must face up, toward u-cup.

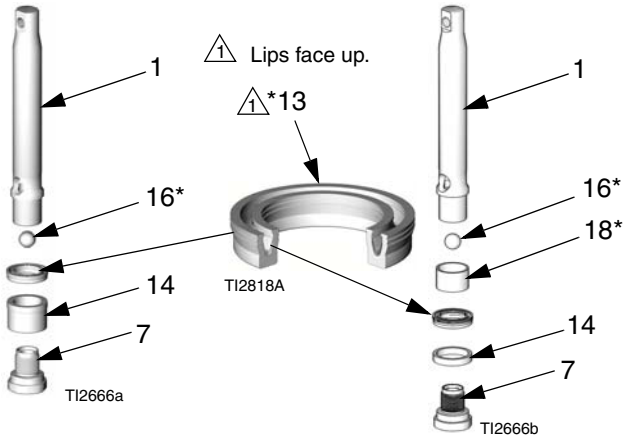

Typical configuration

246831, 262647, 245971, 262648 only

Sealing patch on piston threads is good for four repackings. Use Loctite® on piston threads after four repackings; be sure none gets on ball.

2. Install piston (7). Be careful not to damage sealing edges of u-cup. Torque as specified below.

Model	Torque ft-lb (N•m)
246830 and 245970	24-30 (32-40)
246831, 245971, and 262648	47-53 (63-71)
246832 and 245972	47-53 (63-71)

3. Install throat u-cup as follows:

a. **Models 246831, 262647, 246832, 245971, 262648, and 245972:** Grease u-cup (20*) and cylinder (2). Place u-cup in cylinder with lips facing down. Be careful not to damage sealing edges of u-cup. Install packing nut (19) to properly insert and align u-cup, then remove packing nut.

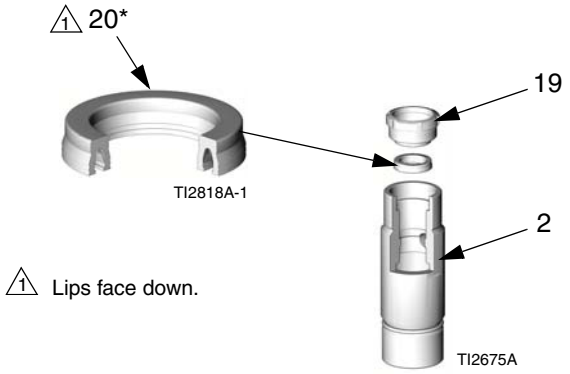

b. **Models 246830 and 245970:** Grease u-cup (20*) and cylinder (2). Place seal installation tool (23*) in cylinder. Place u-cup in tool with lips facing down. Be careful not to damage sealing edges of u-cup. Press u-cup in place with 7/8 in. deep-well socket (S). Remove socket and tool.

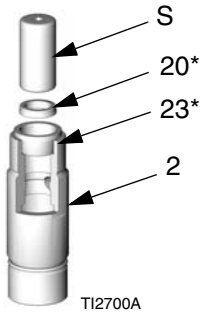

4. Insert bushing (17*). Press bushing in place to seat u-cup.

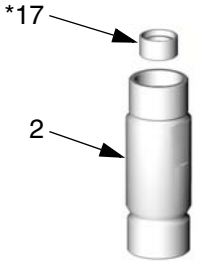

TI2669B

5. Assemble packing nut as follows:

a. **Component A (ISO) Pump:**

- Install spring (25) in wet-cup (19).
- Install o-rings (24*, 26*) on piston (28) and insert piston in wet-cup.
- Compress piston (28) into wet-cup, using a 1/2 in. (13 mm) x 2.5 in. (64 mm) bolt with washers and nut.
- Install retaining ring (22*) in groove.
- Remove bolt, washers, and nut.
- Install o-ring (27*) on wet-cup.
- Install packing nut/wet-cup assembly handtight. Screw assembly all the way down, so external o-ring (27) seats on top of cylinder (2).

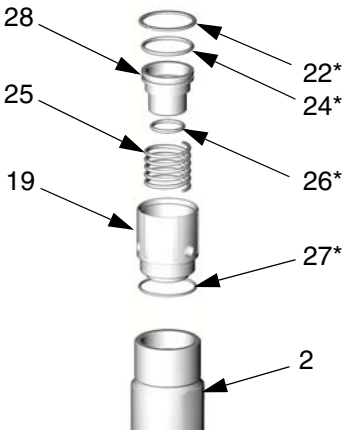

TI3735b

b. **Component B (Resin) Pump:** Install felt washers (21*) into packing nut (19). Install retaining ring (22*). Install packing nut handtight.

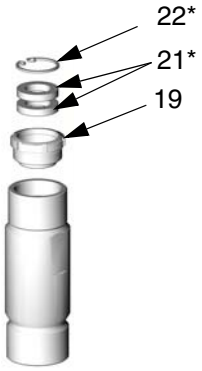

TI2701A

Groove (H) in sleeve outer surface must be toward bottom.

6. Lubricate piston u-cup and sleeve top edge. Push piston assembly into top of sleeve (4). Drive in with non-sparking hammer.

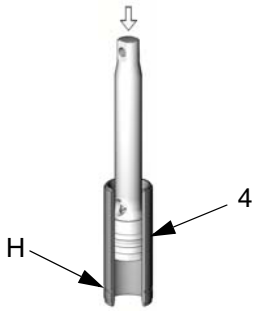

TI2673A

7. Lubricate top 1-2 in. (25-50 mm) of displacement rod (1) and outside of sleeve (4). Grease o-rings (3*) and place one in cylinder and other on bottom of sleeve.

8. Slide sleeve/rod assembly into bottom of cylinder (2). Drive in with hammer until top of groove (H) aligns with bottom of cylinder (L). Use plastic rod to drive displacement rod until 1/4-3/8 in. (6-10 mm) of its greatest diameter is visible above packing nut (19).

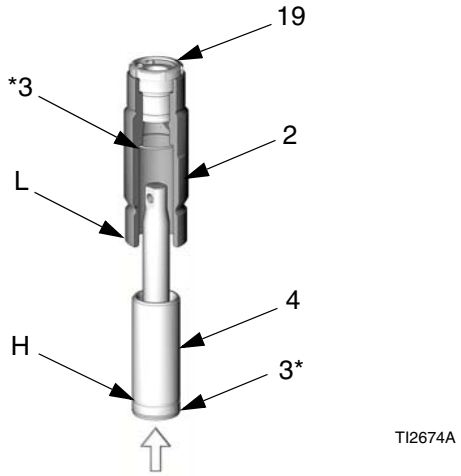

9. Reassemble intake valve with o-ring (10*), seat (9), and ball (11*). Install ball guide (12). *Models 246832 and 245972 only:* Install spring (8*) with screw at top.

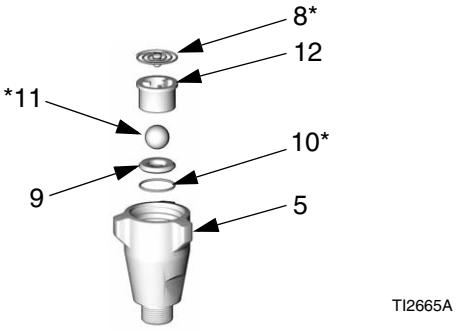

Seat may be flipped over and used on other side. Clean seat thoroughly. No scratches permitted on sealing edge.

10. Replace o-ring (15*). Install intake valve. Torque housing (5) as follows, or be sure intake valve is snug against cylinder.

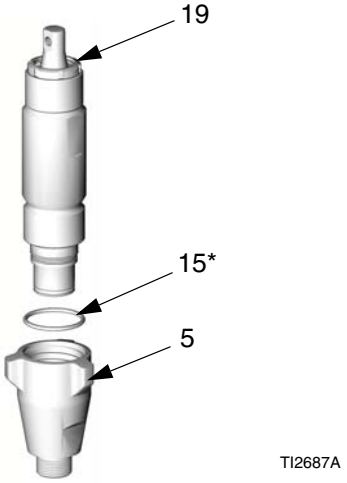

Model	Torque ft-lb (N•m)
246830 and 245970	65-75 (88-101)
246831, 262647, 245971, and 262648	75-85 (101-114)
246832 and 245972	145-155 (195-209)

11. Tighten packing nut/wet-cup.

Do not overtighten packing nut/wet-cup. Throat u-cup (20) is not adjustable.

a. Pump A: Wrap base of wet-cup (19) with a rag and tighten securely with channel locks.

b. Pump B: Torque packing nut (19) to 90-110 in-lb (10-12 N•m).

WARNING

Pump rod and connecting rod move during operation. Moving parts can cause serious injury such as pinching or amputation. Keep hands and fingers away from connecting rod during operation.

12. Reconnect power supply. Turn main power ON .

13. Press . Motor will run until pumps are at bottom of strokes, then shut off.

14. Turn main power OFF 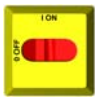 . Disconnect power supply.

Steps 15-18 apply to pump B. See FIG. 3. To reconnect pump A, go to step 19.

15. Ensure star-shaped locknut (G) is screwed on pump with flat side up. Screw pump into bearing housing (M) until pin holes align. Push pin (F) in. Pull retaining spring (E) down.

16. Continue screwing pump into housing until fluid outlet (D) is aligned with steel tube and top threads are +/- 1/16 in. (2 mm) of bearing face (N).

17. Tighten star-shaped locknut (G) by hitting firmly with a non-sparking hammer.

18. Reconnect fluid inlet (C) and outlet (D).

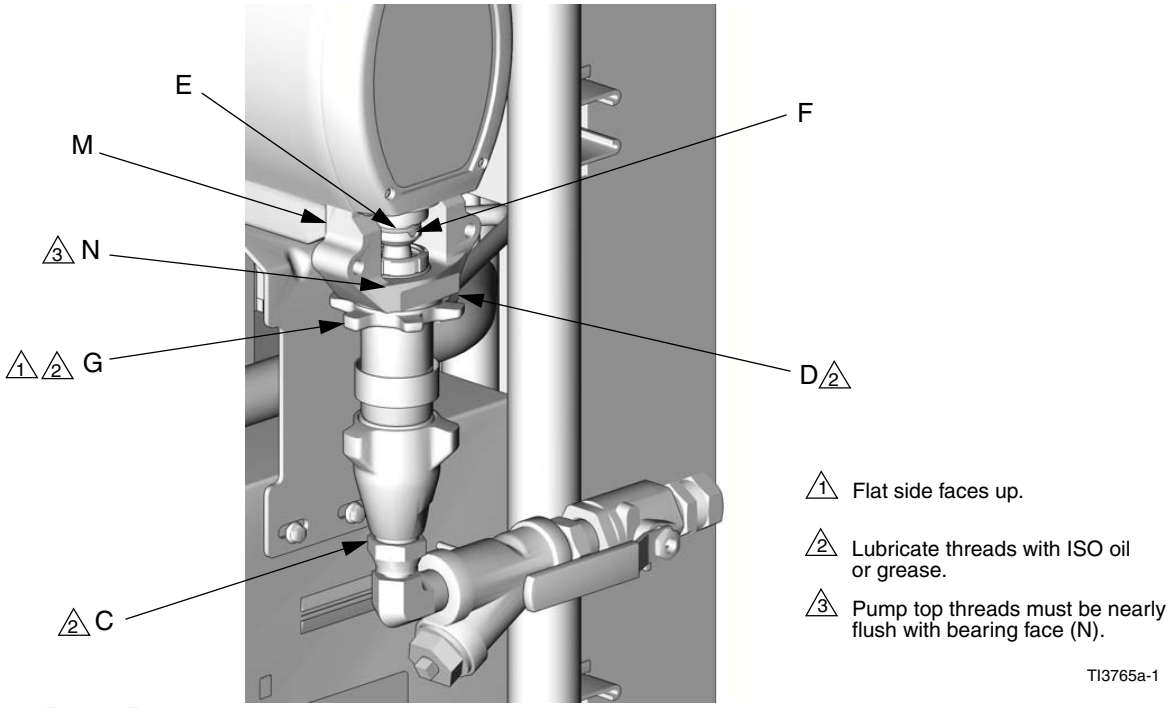

FIG. 3. Reconnect Pump B

Steps 19-32 apply to pump A only. See FIG. 4.

19. Screw pump into bearing housing (M) until top threads are level with bearing face (N). Rotate pump to align pump outlet fitting to outlet tube.

20. Wet-cup has four 1/8 npt ports. Two will be inaccessible when pump is installed. Note or mark these ports. Remove pump. Apply thread sealant and install plugs in the two ports. Torque plugs to 10-15 ft-lb (14-20 N•m). ***Do not overtighten.***

21. Ensure star-shaped locknut (G) is screwed on pump with flat side up. Carefully twist and extend the rod (1) 2 in. (51 mm) above the wet-cup assembly.

22. Start threading pump into bearing housing (M). Place finger guard (P) over rod when it is accessible through window of bearing housing. When pin holes align, insert pin. Pull retaining spring down.

Finger guard is not used on Model E-30.

23. Seat finger guard (P) on wet-cup (19). Continue threading pump into bearing housing (M) until top threads are +/- 1/16 in. (2 mm) of bearing face (N).

24. Apply thread sealant and screw barbed fitting into motor side of wet-cup. Torque to 10-15 ft-lb (14-20 N•m). ***Do not overtighten.***

25. Apply thread sealant and screw elbow (U) into remaining wet-cup port. Torque to 10-15 ft-lb (14-20 N•m). ***Do not overtighten.***

26. Apply thread sealant and screw barbed fitting into elbow (U). Torque to 10-15 ft-lb (14-20 N•m). ***Do not overtighten.***

27. Connect component A outlet tube loosely at pump and at heater. Line up tube, then tighten fittings securely.

28. Tighten star-shaped locknut (G) by hitting firmly with a non-sparking hammer.

29. Apply thread sealant and screw barbed fitting into elbow (U). Torque to 10-15 ft-lb (14-20 N•m). ***Do not overtighten.***

30. Apply thin film of TSL to barbed fittings. Using two hands, support tubes (T) while pushing straight onto barbed fittings. ***Do not let tubes kink or buckle.*** Secure each tube with a wire tie between two barbs.

31. Reconnect fluid inlet (C) and outlet (D).

32. Purge air and prime the system. See Reactor operation manual.

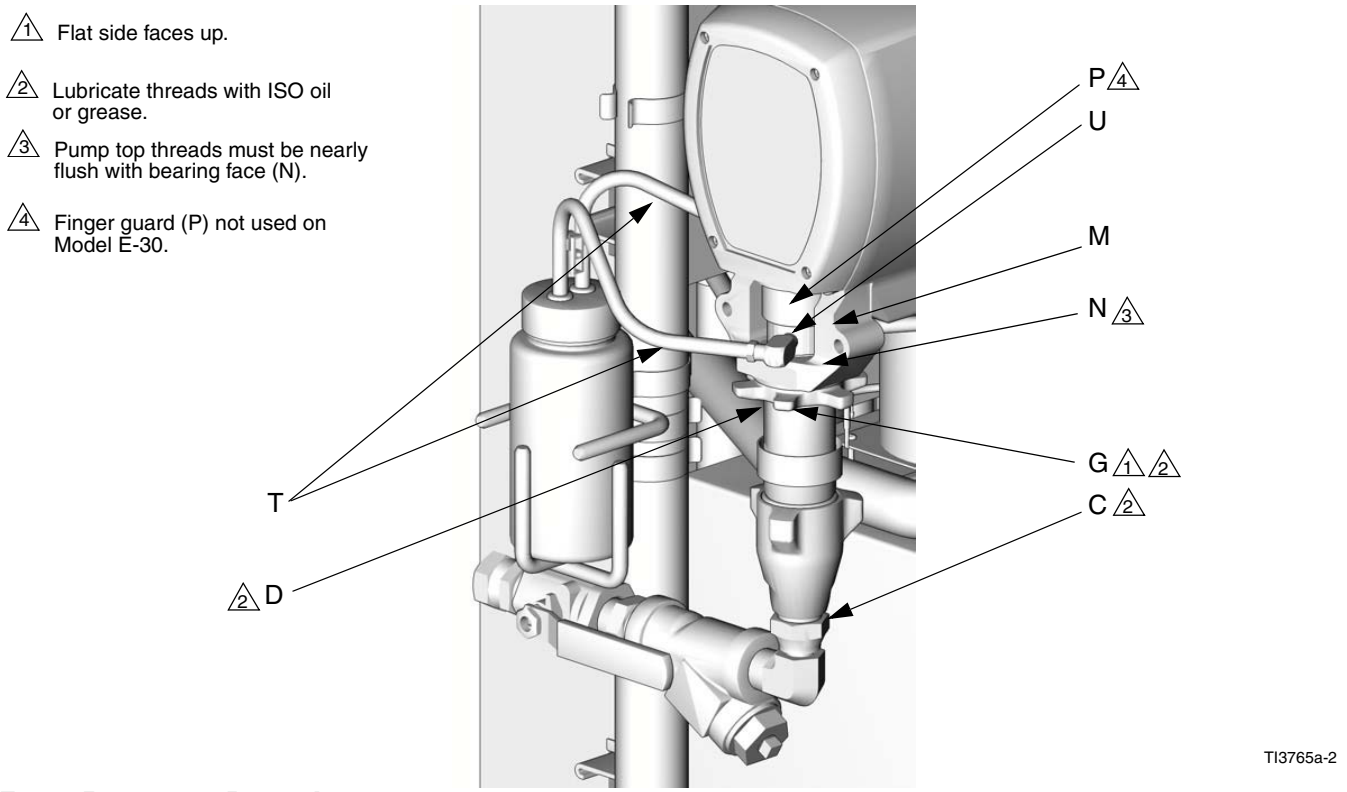

FIG. 4. Reconnect Pump A

Parts

Component A (ISO) Pumps, with wet-cup flush feature

Part 246830, E-20 and E-XP1; includes items 1-7, 9-28
Part 246831, E-XP2; includes items 1-7, 9-22, 24-28
Part 262647, A-25; includes items 1-7, 9-22, 24-28
Part 246832, E-30; includes items 1-17, 19-22, 24-28 (shown)

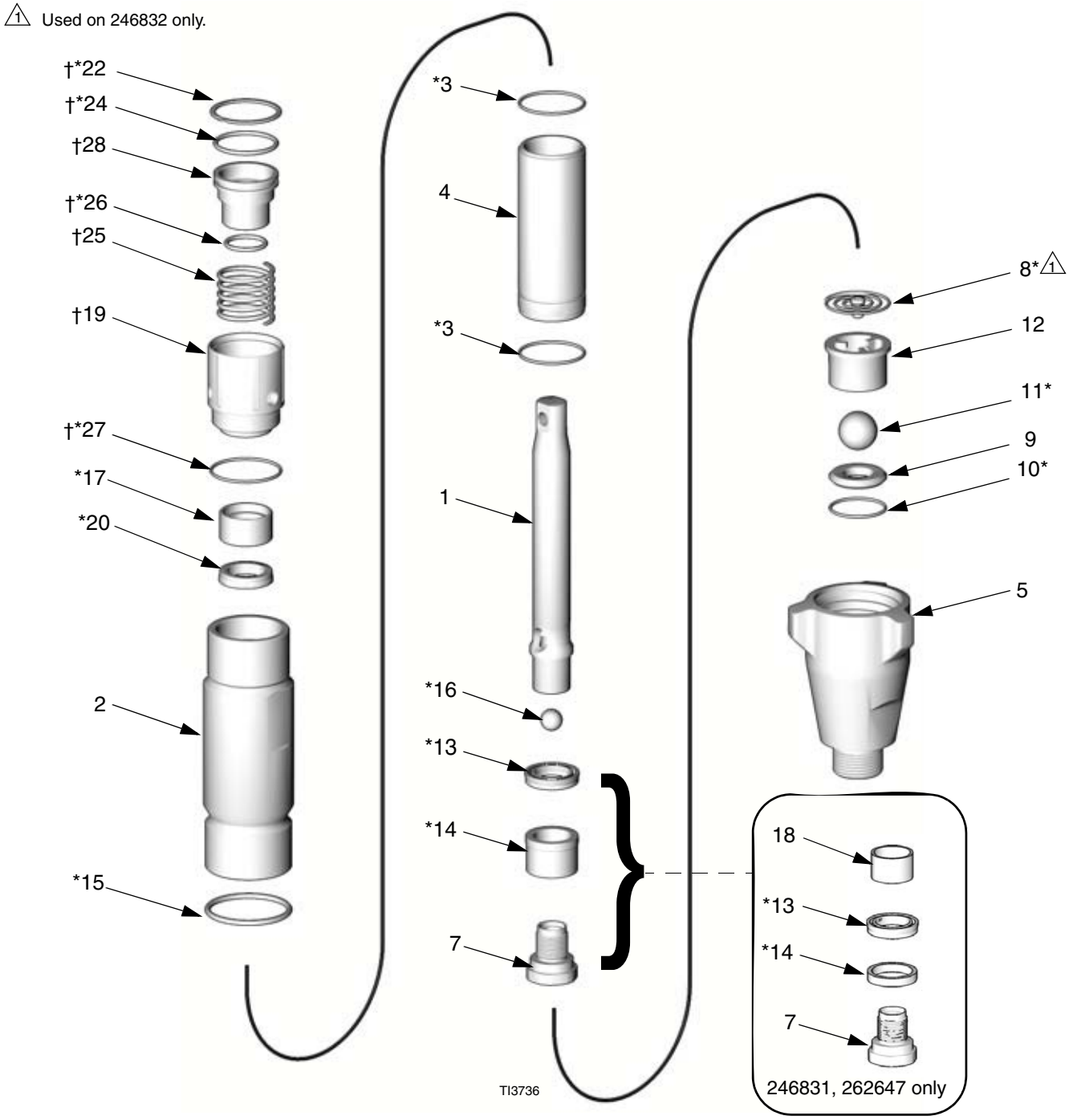

Part 246830, E-20 and E-XP1; includes items 1-7, 9-28
Part 246831, E-XP2; includes items 1-7, 9-22, 24-28
Part 262647, A-25; includes items 1-7, 9-22, 24-28
Part 246832, E-30; includes items 1-22, 24-28 (shown)

Ref.	Part	Description	Qty.
1	240518	ROD, displacement; sst (246830)	1
	240517	ROD, displacement; sst (246831, 262647)	1
	246689	ROD, displacement; sst (246832)	1
2	243346	CYLINDER, pump (246830)	1
	240520	CYLINDER, pump (246831, 262647)	1
	245413	CYLINDER, pump (246832)	1
3*	108526	O-RING; PTFE (246830)	2
	107098	O-RING; PTFE (246831, 262647)	2
	108822	O-RING; PTFE (246832)	2
4	240521	SLEEVE, cylinder; sst (246830)	1
	240525	SLEEVE, cylinder; sst (246831, 262647)	1
	240921	SLEEVE, cylinder; sst (246832)	1
5	195892	HOUSING, valve, intake (246830)	1
	193030	HOUSING, valve, intake (246831, 262647)	1
	198219	HOUSING, valve, intake (246832)	1
7	239932	VALVE, piston (246830)	1
	240150	VALVE, piston (246831, 262647)	1
	240580	VALVE, piston (246832)	1
8*‡	249770	SPRING, intake ball (246832 only)	1
9	239922	SEAT, intake; carbide (246830); includes items 10 and 11	1
	244199	SEAT, intake; carbide (246831, 262647); includes items 10 and 11	1
	240918	SEAT, intake; carbide (246832); includes items 10 and 11	1
10*	107079	O-RING; PTFE (246830)	1
	108526	O-RING; PTFE (246831, 262647)	1
	107098	O-RING; PTFE (246832)	1
11*	105445	BALL, intake; sst; 0.5 in. (13 mm) (246830)	1
	102972	BALL, intake; sst; 0.875 in. (22 mm) (246831, 262647)	1
	107167	BALL, intake; sst; 1 in. (25 mm) (246832)	1
12	192624	GUIDE, ball (246830)	1
	193027	GUIDE, ball (246831, 262647)	1
	193391	GUIDE, ball (246832)	1
13*	117450	SEAL, u-cup, piston; UHMWPE (246830)	1
	117449	SEAL, u-cup, piston; UHMWPE (246831, 262647)	1
	117448	SEAL, u-cup, piston; UHMWPE (246832)	1
14*	15B078	BUSHING, piston (246830)	1
	15J197	BEARING, lower(246831, 262647)	1
	15B079	BUSHING, piston (246832)	1
15*	156593	O-RING; BUNA-N (246830)	1
	156633	O-RING; BUNA-N (246831, 262647)	1
	160325	O-RING; BUNA-N (246832)	1
16*	105444	BALL, piston; sst; 0.3125 in. (8 mm) (246830)	1
	101947	BALL, piston; sst; 0.375 in. (10 mm) (246831, 262647)	1
	107203	BALL, piston; sst; 0.5625 in. (14 mm) (246832)	1
17*	15B075	BUSHING, rod (246830)	1
	15B074	BUSHING, rod (246831, 262647)	1
	15B076	BUSHING, rod (246832)	1
18	15J196	BUSHING, pump (246831, 262647 only)	1
19†	15C569	NUT, packing (246830)	1
	15C571	NUT, packing (246831, 262647)	1
	15C573	NUT, packing (246832)	1
20*	117447	SEAL, u-cup, throat; UHMWPE (246830)	1
	117446	SEAL, u-cup, throat; UHMWPE (246831, 262647)	1
	117448	SEAL, u-cup, throat; UHMWPE (246832)	1
22*†	118377	RING, retaining (246830)	1
	118378	RING, retaining (246831, 262647)	1
	118379	RING, retaining (246832)	1
23*	15B661	TOOL, installation, seal (246830 only); not shown; part of Repair Kit 246420	1
24*†	118381	O-RING; fluoroelastomer (246830)	1
	107563	O-RING; fluoroelastomer (246831, 262647)	1
	118403	O-RING; fluoroelastomer (246832)	1
25†	118374	SPRING (246830)	1
	118375	SPRING (246831, 262647)	1
	118376	SPRING (246832)	1
26*†	118380	O-RING; fluoroelastomer (246830)	1
	110955	O-RING; fluoroelastomer (246831, 262647)	1
	C20111	O-RING; fluoroelastomer (246832)	1
27*†	107563	O-RING; fluoroelastomer (246830)	1
	103414	O-RING; fluoroelastomer (246831, 262647)	1
	111178	O-RING; fluoroelastomer (246832)	1
28†	15C570	PISTON, wet-cup, ISO (246830)	1
	15C572	PISTON, wet-cup, ISO (246831, 262647)	1
	15C574	PISTON, wet-cup, ISO (246832)	1

* These parts are included in the Pump Repair Kits, which may be purchased separately. Some parts in the kit may not be used in your pump.

† These parts are included in the Wet-Cup Kits. Order the correct kit for your pump from the table below. See page 26 for information on 246928 Reservoir Kit.

Pump Part No.	Pump Repair Kit	Wet-Cup Kit
246830	246420	246962
246831, 262647	15C851	246963
246832	15C852	246964

‡ This part is also available in the Intake Spring Kit 249770, which may be purchased separately.

Component B (Resin) Pumps

Part 245970, E-20 and E-XP1; includes items 1-7, 9-23
Part 245971, E-XP2; includes items 1-7, 9-22
Part 262648, A-25; includes items 1-7, 9-22
Part 245972, E-30; includes items 1-22 (shown)

NOTE: These pumps were also used on Component A (ISO) side of Reactors built before May 2003.

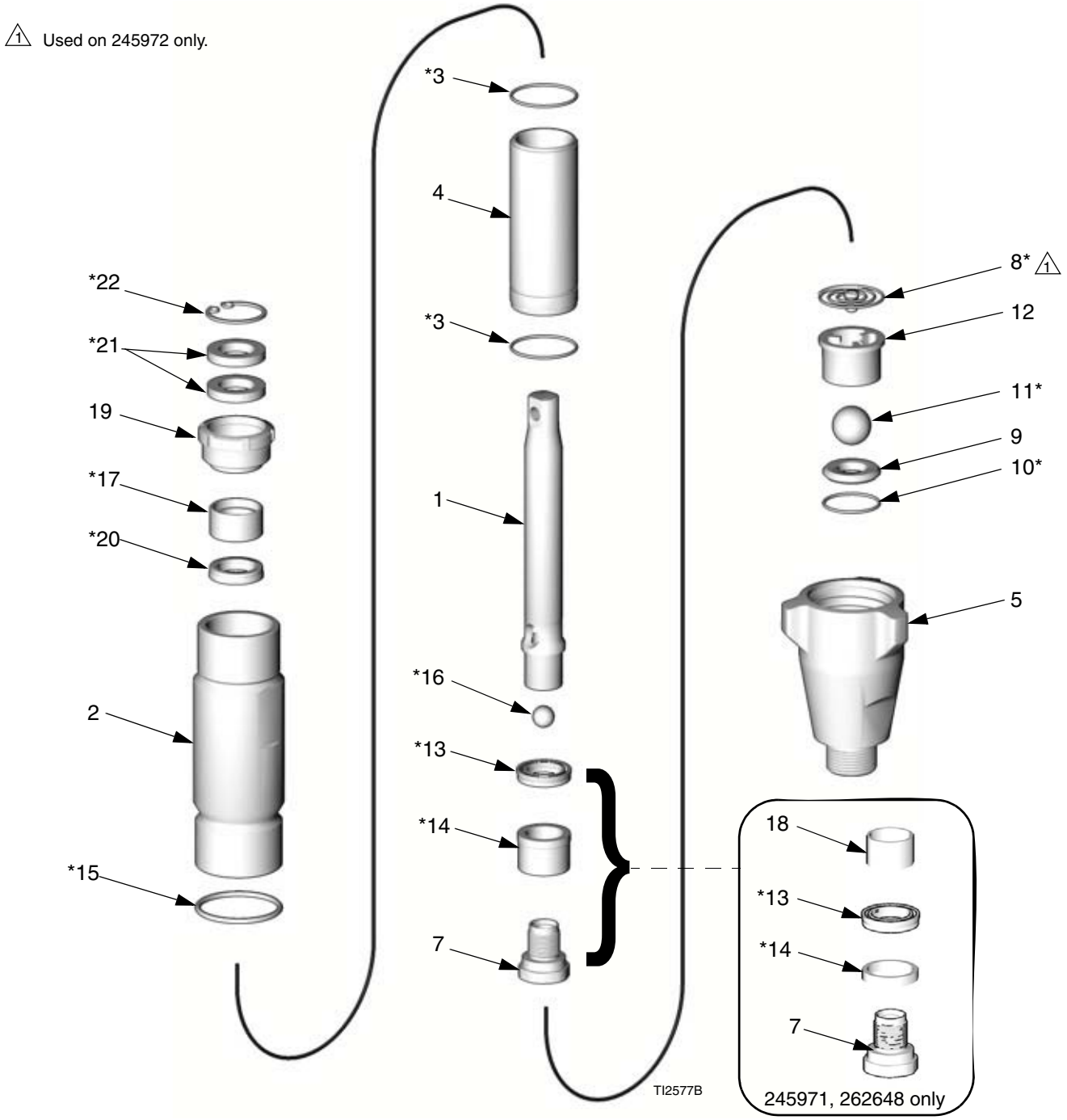

Part 245970, E-20 and E-XP1; includes items 1-7, 9-23
Part 245971, E-XP2; includes items 1-7, 9-22
Part 262648, A-25; includes items 1-7, 9-22
Part 245972, E-30; includes items 1-22 (shown)

Ref.	Part	Description	Qty.
1	240518	ROD, displacement; sst (245970)	1
	240517	ROD, displacement; sst (245971, 262648)	1
	246689	ROD, displacement; sst (245972)	1
2	243346	CYLINDER, pump (245970)	1
	240520	CYLINDER, pump (245971, 262648)	1
	245413	CYLINDER, pump (245972)	1
3*	108526	O-RING; PTFE (245970)	2
	107098	O-RING; PTFE (245971, 262648)	2
	108822	O-RING; PTFE (245972)	2
4	240521	SLEEVE, cylinder; sst (245970)	1
	240525	SLEEVE, cylinder; sst (245971, 262648)	1
	240921	SLEEVE, cylinder; sst (245972)	1
5	195892	HOUSING, valve, intake (245970)	1
	193030	HOUSING, valve, intake (245971, 262648)	1
	198219	HOUSING, valve, intake (245972)	1
7	239932	VALVE, piston (245970)	1
	240150	VALVE, piston (245971, 262648)	1
	240580	VALVE, piston (245972)	1
8*‡	249770	SPRING, intake ball (245972 only)	1
9	239922	SEAT, intake; carbide (245970); includes items 10 and 11	1
	244199	SEAT, intake; carbide (245971, 262648); includes items 10 and 11	1
	240918	SEAT, intake; carbide (245972); includes items 10 and 11	1
10*	107079	O-RING; PTFE (245970)	1
	108526	O-RING; PTFE (245971, 262648)	1
	107098	O-RING; PTFE (245972)	1
11*	105445	BALL, intake; sst; 0.5 in. (13 mm) (245970)	1
	102972	BALL, intake; sst; 0.875 in. (22 mm) (245971, 262648)	1
	107167	BALL, intake; sst; 1 in. (25 mm) (245972)	1
12	192624	GUIDE, ball (245970)	1
	193027	GUIDE, ball (245971, 262648)	1
	193391	GUIDE, ball (245972)	1
13*	117450	SEAL, u-cup, piston; UHMWPE (245970)	1
	117449	SEAL, u-cup, piston; UHMWPE (245971, 262648)	1
	117448	SEAL, u-cup, piston; UHMWPE (245972)	1
14*	15B078	BUSHING, piston (245970)	1
	15J197	BEARING, lower (245971, 262648)	1
	15B079	BUSHING, piston (245972)	1
15*	156593	O-RING; BUNA-N (245970)	1
	156633	O-RING; BUNA-N (245971, 262648)	1
	160325	O-RING; BUNA-N (245972)	1
16*	105444	BALL, piston; sst; 0.3125 in. (8 mm) (245970)	1
	101947	BALL, piston; sst; 0.375 in. (10 mm) (245971, 262648)	1
	107203	BALL, piston; sst; 0.5625 in. (14 mm) (245972)	1
17*	15B075	BUSHING, rod (245970)	1
	15B074	BUSHING, rod (245971, 262648)	1
	15B076	BUSHING, rod (245972)	1
18	15J196	BUSHING, pump (245971, 262648 only)	
19†	193046	NUT, packing (245970)	1
	193032	NUT, packing (245971, 262648)	1
	189589	NUT, packing (245972)	1
20*	117447	SEAL, u-cup, throat; UHMWPE (245970)	1
	117446	SEAL, u-cup, throat; UHMWPE (245971, 262648)	1
	117448	SEAL, u-cup, throat; UHMWPE (245972)	1
21*	117597	WASHER, felt (245970)	2
	117599	WASHER, felt (245971, 262648)	2
	117600	WASHER, felt (245972)	2
22*	551528	RING, retaining (245970)	1
	117718	RING, retaining (245971, 262648)	1
	117719	RING, retaining (245972)	1
23*	15B661	TOOL, installation, seal (245970 only); not shown; part of Repair Kit 246420	1

* These parts are also included in the Pump Repair Kits, which may be purchased separately. Some parts in the kit may not be used in your pump. Order the correct kit for your pump from the table below.

Pump Part No.	Repair Kit
245970	246420
245971, 262648	246421
245972	246422

† Wet-Cup Conversion Kits may be purchased separately to convert pumps 245970, 245971, 262648, and 245972. See page 26 for further information.

‡ This part is also available in the Intake Spring Kit 249770, which may be purchased separately.

Accessories

Wet-Cup Conversion Kits

These kits convert 245970, 245971, 262648, or 245972 pumps to the wet-cup flush design. Refer to the following table to select the correct kit for your pump. Kits include instruction manual 309911.

Pump Part No.	Wet-Cup Conversion Kit	
245970	**248061,** includes:	
	246962 Wet-Cup Kit (see page 23 for parts)	246928 Reservoir Kit (see below)
245971, 262648	**248062,** includes:	
	246963 Wet-Cup Kit (see page 23 for parts)	246928 Reservoir Kit (see below)
245972	**248063,** includes:	
	246964 Wet-Cup Kit (see page 23 for parts)	246928 Reservoir Kit (see below)

246928 Reservoir Kit

This kit is included with Wet-Cup Conversion Kits 248061, 248062, and 248063 (see above).

This kit can also be used if replacing an earlier style ISO pump with the wet-cup flush design. Order this kit separately, and order the correct pump for your Reactor from page 22.

Kit includes reservoir, tubing, mounting hardware, and fittings to supply TSL to flush wet-cup. Includes instruction manual 309911.

Throat Seal Liquid

Use in reservoir for piston style wet-cups on component A pumps, or to fill wet-cup of component B pumps.

Part No.	Quantity
206995	1 qt (1 liter)
206996	1 gal. (3.8 liters)

217374 ISO Pump Oil

Use in wet-cups of non-piston style component A pumps (built before May 2003), and as thread lubricant when rebuilding pumps.

Technical Data

Category	Data
Maximum working pressure	3500 psi (24.5 MPa, 245 bar)
Effective area of displacement	*246830 and 245970:* 0.396 in.^{2} (2.55 cm^2) *246831, 262647, 245971, and 262648:* 0.552 in.^{2} (3.56 cm^2) *246832 and 245972:* 0.743 in.^{2} (4.79 cm^2)
Fluid inlet size	*246830, 246831, 262647, 245970, 245971, and 262648:* 3/4 npt(m) *246832 and 245972:* 1 npsm(m)
Fluid outlet size	*246830 and 245970:* 1/4 npt(f) *246831, 262647, 246832, 245971, 262648, and 245972:* 3/8 npt(f)
Wetted parts	stainless steel, PTFE, zinc-plated carbon steel, acetal, tungsten carbide, chrome plating, ultra-high molecular weight polyethylene

Loctite® is a registered trademark of the Loctite Company.

Graco Standard Warranty

Graco warrants all equipment referenced in this document which is manufactured by Graco and bearing its name to be free from defects in material and workmanship on the date of sale to the original purchaser for use. With the exception of any special, extended, or limited warranty published by Graco, Graco will, for a period of twelve months from the date of sale, repair or replace any part of the equipment determined by Graco to be defective. This warranty applies only when the equipment is installed, operated and maintained in accordance with Graco's written recommendations.

This warranty does not cover, and Graco shall not be liable for general wear and tear, or any malfunction, damage or wear caused by faulty installation, misapplication, abrasion, corrosion, inadequate or improper maintenance, negligence, accident, tampering, or substitution of non-Graco component parts. Nor shall Graco be liable for malfunction, damage or wear caused by the incompatibility of Graco equipment with structures, accessories, equipment or materials not supplied by Graco, or the improper design, manufacture, installation, operation or maintenance of structures, accessories, equipment or materials not supplied by Graco.

This warranty is conditioned upon the prepaid return of the equipment claimed to be defective to an authorized Graco distributor for verification of the claimed defect. If the claimed defect is verified, Graco will repair or replace free of charge any defective parts. The equipment will be returned to the original purchaser transportation prepaid. If inspection of the equipment does not disclose any defect in material or workmanship, repairs will be made at a reasonable charge, which charges may include the costs of parts, labor, and transportation.

THIS WARRANTY IS EXCLUSIVE, AND IS IN LIEU OF ANY OTHER WARRANTIES, EXPRESS OR IMPLIED, INCLUDING BUT NOT LIMITED TO WARRANTY OF MERCHANTABILITY OR WARRANTY OF FITNESS FOR A PARTICULAR PURPOSE.

Graco's sole obligation and buyer's sole remedy for any breach of warranty shall be as set forth above. The buyer agrees that no other remedy (including, but not limited to, incidental or consequential damages for lost profits, lost sales, injury to person or property, or any other incidental or consequential loss) shall be available. Any action for breach of warranty must be brought within two (2) years of the date of sale.

GRACO MAKES NO WARRANTY, AND DISCLAIMS ALL IMPLIED WARRANTIES OF MERCHANTABILITY AND FITNESS FOR A PARTICULAR PURPOSE, IN CONNECTION WITH ACCESSORIES, EQUIPMENT, MATERIALS OR COMPONENTS SOLD BUT NOT MANUFACTURED BY GRACO. These items sold, but not manufactured by Graco (such as electric motors, switches, hose, etc.), are subject to the warranty, if any, of their manufacturer. Graco will provide purchaser with reasonable assistance in making any claim for breach of these warranties.

In no event will Graco be liable for indirect, incidental, special or consequential damages resulting from Graco supplying equipment hereunder, or the furnishing, performance, or use of any products or other goods sold hereto, whether due to a breach of contract, breach of warranty, the negligence of Graco, or otherwise.

FOR GRACO CANADA CUSTOMERS

The Parties acknowledge that they have required that the present document, as well as all documents, notices and legal proceedings entered into, given or instituted pursuant hereto or relating directly or indirectly hereto, be drawn up in English. Les parties reconnaissent avoir convenu que la rédaction du présente document sera en Anglais, ainsi que tous documents, avis et procédures judiciaires exécutés, donnés ou intentés, à la suite de ou en rapport, directement ou indirectement, avec les procédures concernées.

Graco Information

TO PLACE AN ORDER, contact your Graco distributor, or call this number to identify the distributor closest to you:

1-800-328-0211 Toll Free
612-623-6921
612-378-3505 Fax

All written and visual data contained in this document reflects the latest product information available at the time of publication. Graco reserves the right to make changes at any time without notice.

For patent information, see www.graco.com/patents.

Original instructions. This manual contains English. MM 309577

Graco Headquarters: Minneapolis
International Offices: Belgium, China, Japan, Korea

GRACO INC. AND SUBSIDIARIES • P.O. BOX 1441 • MINNEAPOLIS MN 55440-1441 • USA

Copyright 2003, Graco Inc. All Graco manufacturing locations are registered to ISO 9001.

www.graco.com
Revised July 2012